REVISIONS				
ZONE	LTR	DESCRIPTION	DATE	APPROVAL
	B	REVISED AND REDRAWN	11/28/97	

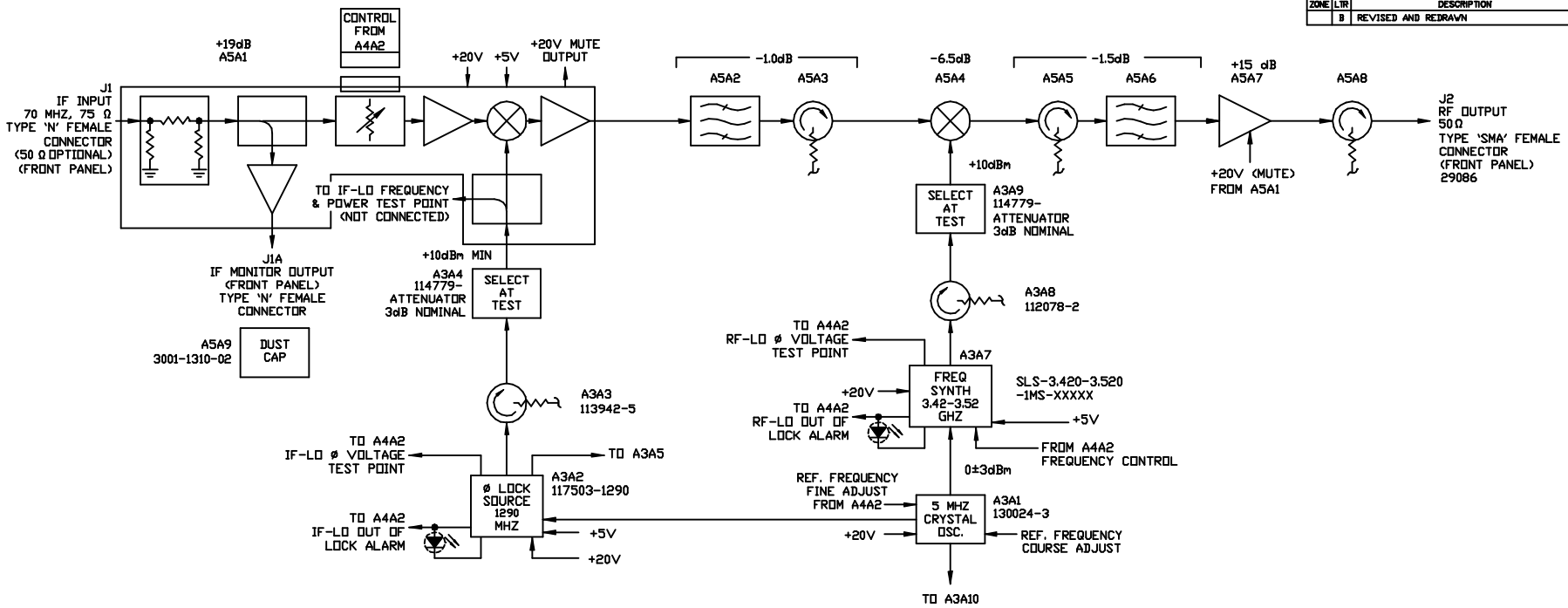

OUTPUT FREQUENCY (MHz)	A5A1 P/N-	A5A2 P/N-	A5A3 P/N -	A5A4 P/N -	A5A5/A5A8 P/N -	A5A6 P/N-	A5A7 P/N -
2200-2300	IUM75-70-1220/T1-XXXXX 70 MHz TO 1220 MHz	FLT-118883-1.22 1220 ±20 MHz	113942-7	M40-1.22-2.25	114752	FLT-124960 2.2-2.3 GHz	AMF-2223-11B- -XXXXX

-5	-4	-3	-2	-1	NOMENCLATURE OR DESCRIPTION	SYM/NOTES	PART NO.	CODE IDENT.	ITEM NO.
QTY REQ'D					PARTS LIST				

SYM	DESCRIPTION	QTY	NEXT ASSY	USED ON
	HOLE DATA TABLE		APPLICATION	

UNLESS OTHERWISE SPECIFIED DIMENSIONS ARE IN INCHES TOLERANCES ON DECIMALS .XX±.01 .XXX±.005 ANGLES ±0°30'

MATERIAL

FINISH

HEAT TREAT

	NAME	DATE
DRN BY	S. Philips	8/12/97
CHKD BY		
APPROVED BY		
PROJ ENGR		
ENG SECT		
Q.A.		

MITSI
100 Davids Drive, Hauppauge, New York 11788

BLOCK DIAGRAM
UP/DOWNCONVERTER
MODEL U/D-100-72507

SIZE	CODE IDENT. NO.		REV.
C	33592	131274	B
SCALE	REF 72507	SHEET 1 OF 4	

131274

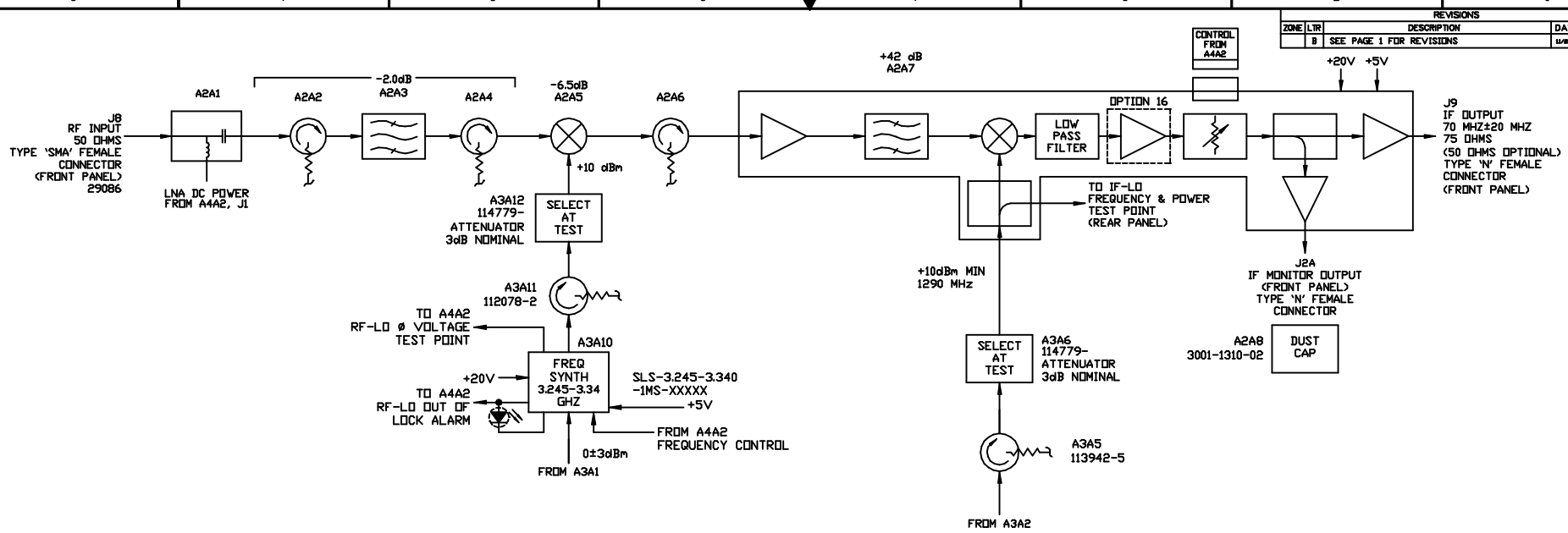

INPUT FREQUENCY (MHz)	A2A1 P/N-	A2A2/A2A4 P/N-	A2A3 P/N-	A2A5 P/N -	A2A6 P/N -	A2A7 P/N -
2025-2120	ZFBT-4R2GW-FT	112078-2	FLT-124960 2.025-2.12 GHz	M40-2.1-1.22	113942-7	IDM75-1220-70/T1-XXXXX 1220 MHz TO 70 MHz

REVISIONS

ZONE	LTR	DESCRIPTION	DATE	APPROVAL
	B	SEE PAGE 1 FOR REVISIONS	11/28/97	

-5	-4	-3	-2	-1	NOMENCLATURE OR DESCRIPTION	SYM/NOTES	PART NO.	CODE IDENT.	ITEM NO.
QTY REQ'D					PARTS LIST				

SYM	DESCRIPTION	QTY	NEXT ASSY	USED ON
HOLE DATA TABLE			APPLICATION	

UNLESS OTHERWISE SPECIFIED DIMENSIONS ARE IN INCHES TOLERANCES ON DECIMALS .XX±.01 .XXX±.005 ANGLES ±0°30'

MATERIAL

FINISH

HEAT TREAT

	NAME	DATE
DRN BY	S. Philips	8/12/97
CHKD BY		
APPROVED BY		
PROJ ENGR		
ENG SECT		
Q.A.		

MITEQ
100 Davids Drive, Hauppauge, New York 11788

BLOCK DIAGRAM
UP/DOWNCONVERTER
MODEL U/D-100-72507

SIZE	CODE IDENT. NO.		REV.
C	33592	131274	B
SCALE	REF 72507		SHEET 2 OF 4

131274

OPTIONS TABLE

1D	10 WATT POWER AMPLIFIER ±1 × 10 (0 TO 50°C)	ADD J11, A7A1 TO A7A4, A6A1, A6A2
10A	HIGHER STABILITY FREQUENCY REFERENCE ±1 × 10^{-8} (0 TO 50°C)	CHANGE A3A1 P/N TO 130024-3A
10B	HIGHER STABILITY FREQUENCY REFERENCE ±5 × 10^{-9} (0 TO 50°C)	CHANGE A3A1 P/N TO 130024-3B
10C	HIGHER STABILITY FREQUENCY REFERENCE ±2 × 10^{-9} (0 TO 50°C)	CHANGE A3A1 P/N TO 130024-3C
15	50Ω IF IMPEDANCE	CHANGE A2A7 P/N TO IDM16A75-1220-70/T1 CHANGE A5A1 P/N TO IUM50-70-1220/T1
17A	REMOTE CONTROL RS422	REMOVE JUMPERS J6C AND J6D ON A4A2 P/N 129344
25	LOW NOISE AMPLIFIER	ADD EXTERNAL AMPLIFIER A8A1 P/N AMF-2.025-2.12-XXXXX

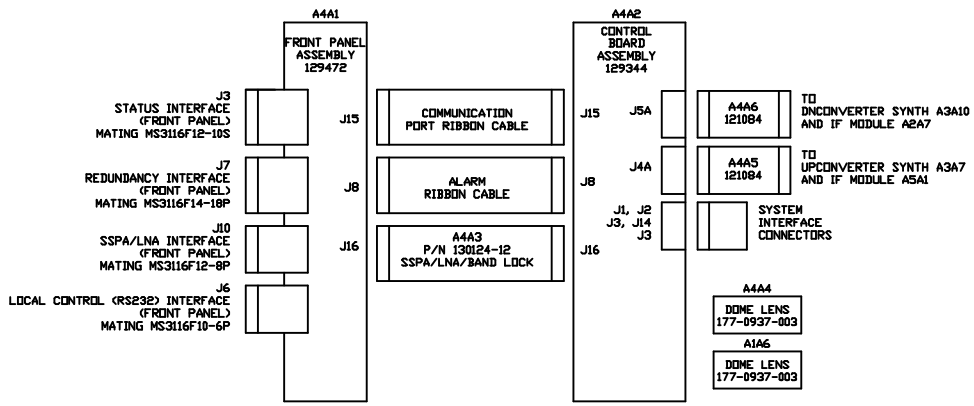

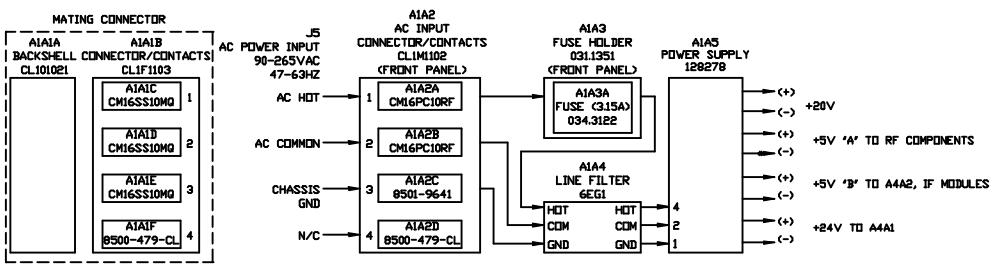

NOTES

1. FORM-C ALARM CONNECTOR STATUS DEFINED AS FOLLOWS --
   NORMAL: DC POWER NORMAL & LOCAL OSCILLATORS IN LOCK
   ALARM: DC POWER FAULT OR LOCAL OSCILLATORS OUT OF LOCK
2. 'XXXXX' IS A UNIQUE REFERENCE NUMBER ASSIGNED AT TIME OF ORDER.

A4A2 TO SYSTEM INTERFACE CONNECTIONS

J1 PIN #	DC POWER CONNECTIONS
1	+24V GROUND
2	+20V GROUND
3	+5V 'A' GROUND
4	+5V 'B' GROUND
5	--
6	+24V
7	+5V 'A'
8	+5V 'B'
9	--
10	+20V
11	REF. FREQ. FINE ADJUST
12	REF FREQ. FINE ADJ. RETURN
13	--
14	--
15	UP MUTE
16	--
17	LNA POWER TO A2A1
18	LNA POWER RETURN
19	--
20	--

J2 PIN #	UP COMP. ALARMS/MONITOR
1	--
2	RF LO LOCK (+20V)
3	--
4	--
5	IF LO LOCK (+20V)
6	--
7	RF LO PHASE VOLTAGE
8	IF LO PHASE VOLTAGE
J3 PIN #	DOWN ALARMS/MONITOR
1	--
2	RF LO LOCK (+20V)
3	--
4	--
5	--
6	--
7	RF LO PHASE VOLTAGE
8	--

J3 - STATUS INTERFACE CONNECTIONS

PIN #	DESIGNATION
A	RS485/422 DATA OUT-
B	DOWNCONV. SUMMARY ALARM NC
C	DOWNCONV. SUMMARY ALARM COM
D	DOWNCONV. SUMMARY ALARM NO
E	RS485/422 DATA IN -
F	UPCONV. SUMMARY ALARM NO
G	UPCONV. SUMMARY ALARM COM
H	UPCONV. SUMMARY ALARM NC
J	RS485/422 DATA OUT+
K	RS485/422 DATA IN-

J7 - REDUNDANCY INTERFACE CONNECTIONS

PIN #	DESIGNATION
A	GROUND
B	RS485/422 DATA IN +
C	RS485/422 DATA IN-
D	RS485/422 DATA OUT+
E	RS485/422 DATA OUT-
F	--
G	RED. UNIT +5V
H	RED.Y UNIT +5V RETURN
J	RED. UNIT +24V
K	RED. UNIT +24V RETURN
L	--
M	DOWNCONV. SUMMARY ALARM NC
N	UPCONV. SUMMARY ALARM NC
P	UPCONV. SUMMARY ALARM COM
R	UPCONV. SUMMARY ALARM NO
S	DOWNCONV. SUMMARY ALARM COM
T	DOWNCONV. SUMMARY ALARM NO
U	--

J10 - SSPA/LNA INTERFACE CONNECTIONS

PIN #	DESIGNATION
A	SSPA OUTPUT MONITOR
B	SSPA MONITOR RETURN
C	+20V LNA RETURN
D	+20V LNA
E	--
F	--
G	--
H	--

J6 - LOCAL CONTROL INTERFACE (RS232) CONNECTIONS

PIN #	DESIGNATION
A	GROUND
B	RD
C	TD
D	CTS
E	RTS
F	--

REVISIONS

ZONE	LTR	DESCRIPTION	DATE	APPROVAL
	B	SEE PAGE 1 FOR REVISIONS	11/26/97	

-5	-4	-3	-2	-1	NOMENCLATURE OR DESCRIPTION	SYM/NOTES	PART NO.	CODE IDENT.	ITEM NO.
QTY REQ'D					PARTS LIST				

SYM	DESCRIPTION	QTY	NEXT ASSY	USED ON
	HOLE DATA TABLE		APPLICATION	

UNLESS OTHERWISE SPECIFIED DIMENSIONS ARE IN INCHES TOLERANCES ON DECIMALS .XX±.01 .XXX±.005 ANGLES ±0°30'

MATERIAL

FINISH

HEAT TREAT

	NAME	DATE
DRN BY	S.Philips	8/12/97
CHKD BY		
APPROVED BY		
PROJ ENGR		
ENG SECT		
Q.A.		

MITEQ 100 Davids Drive, Hauppauge, New York 11788

BLOCK DIAGRAM
UP/DOWN CONVERTER
MODEL U/D-100-72507

SIZE	CODE IDENT. NO.		REV.
C	33592	131274	B
SCALE	REF P72507	SHEET 3 OF 4	

131274

REVISIONS				
ZONE	LTR	DESCRIPTION	DATE	APPROVAL
	B	SEE PAGE 1 FOR REVISIONS	11/26/97	

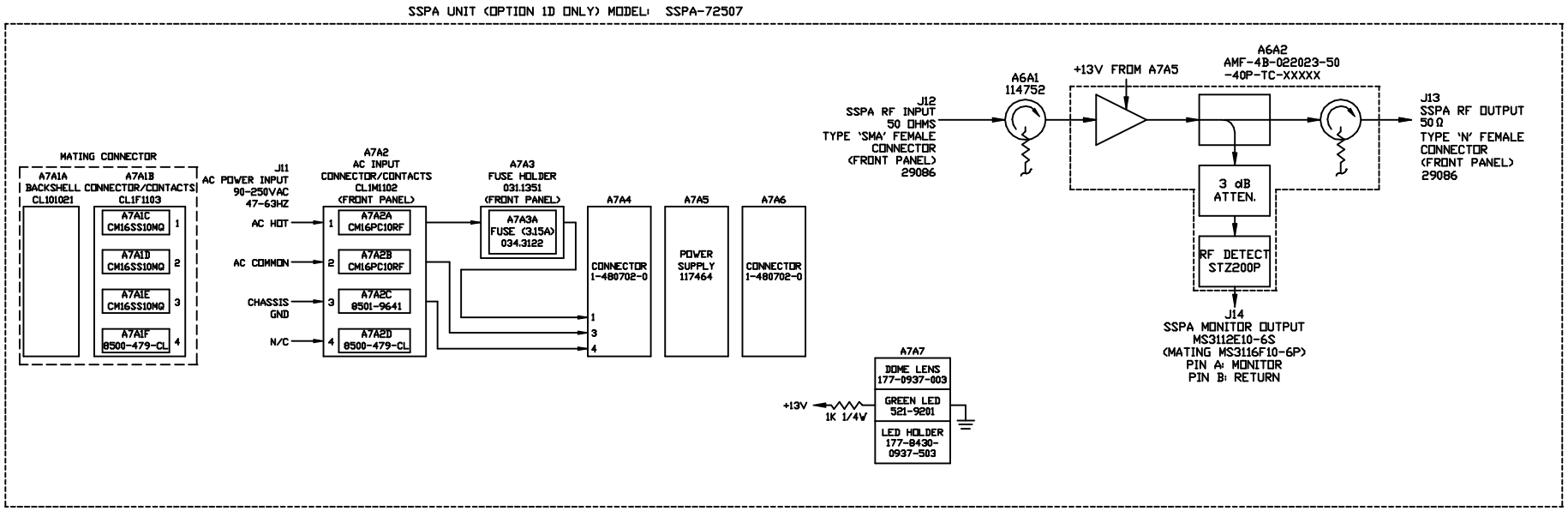

OPTION 1 DC POWER	
FUNCTION	A7A6 PIN #
+13V	1
+13V	2
+13V SENSE	3
+13V RETURN	4
+13V RETURN	5
+13V SENSE RETURN	6
CABLE DRAIN	N/C

-5	-4	-3	-2	-1	NOMENCLATURE OR DESCRIPTION	SYM/NOTES	PART NO.	CODE IDENT.	ITEM NO.
QTY REQ'D					PARTS LIST				

SYM	DESCRIPTION	QTY	NEXT ASSY	USED ON
	HOLE DATA TABLE		APPLICATION	

UNLESS OTHERWISE SPECIFIED DIMENSIONS ARE IN INCHES TOLERANCES ON DECIMALS .XX±.01 .XXX±.005 ANGLES ±0°30'

MATERIAL

FINISH

HEAT TREAT

	NAME	DATE
DRN BY	S.Philips	8/12/97
CHKD BY		
APPROVED BY		
PROJ ENGR		
ENG SECT		
Q.A.		

MITSI
100 Davids Drive, Hauppauge, New York 11788

BLOCK DIAGRAM
UP/DOWNCONVERTER
MODEL U/D-100-72507

SIZE	CODE IDENT. NO.		REV.
C	33592	131274	B
SCALE	REF 72507		SHEET 4 OF 4

131274